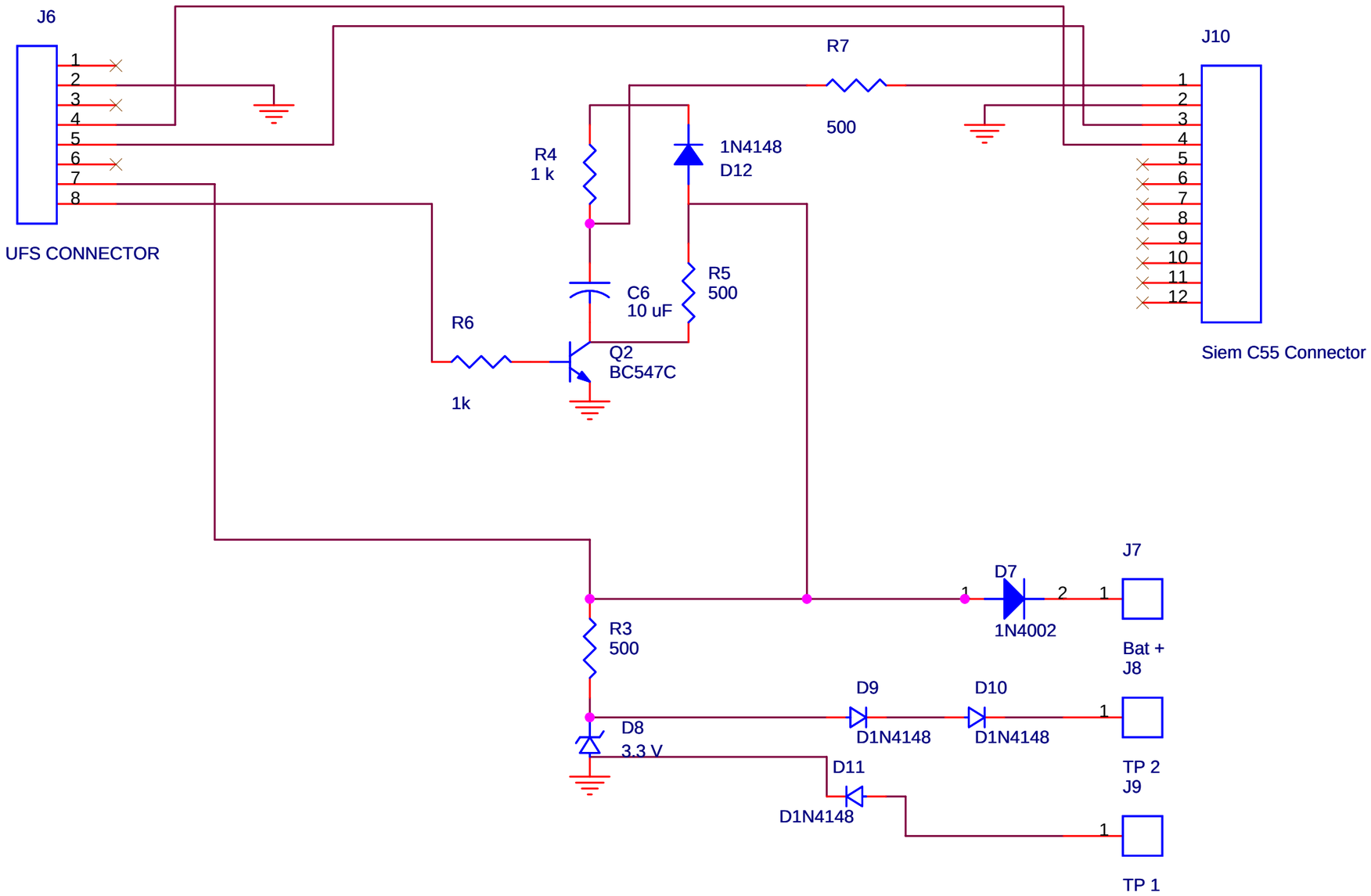

Title	Easy UFSx TP adapter for SST	
Size A	Document Number x65\x70 TP adapter	Rev 1
Date: Tuesday, June 21, 2005	Sheet 1 of 1	